SCHOTS
HOME EMPORIUM

SELINA 180

DOUBLE WALL HUNG VANITY

KA313050, KA313051

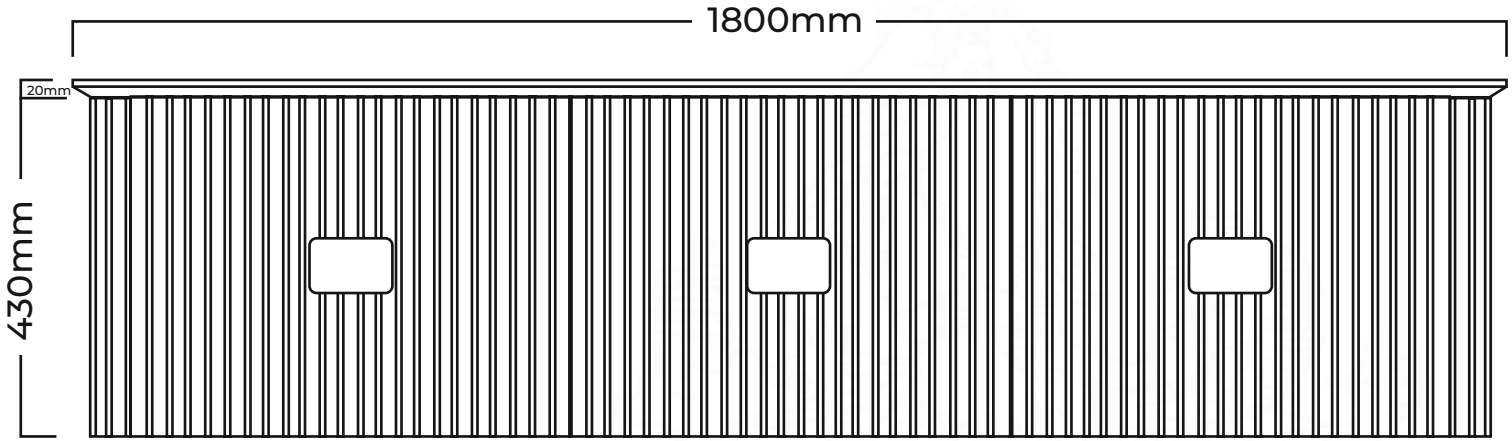

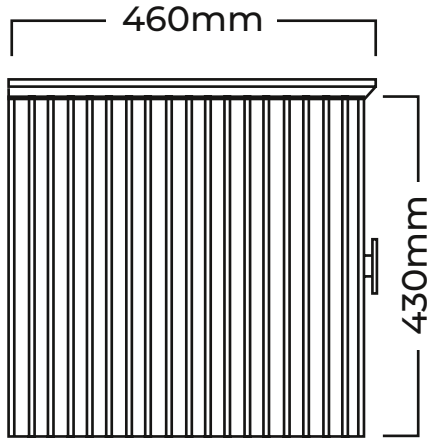

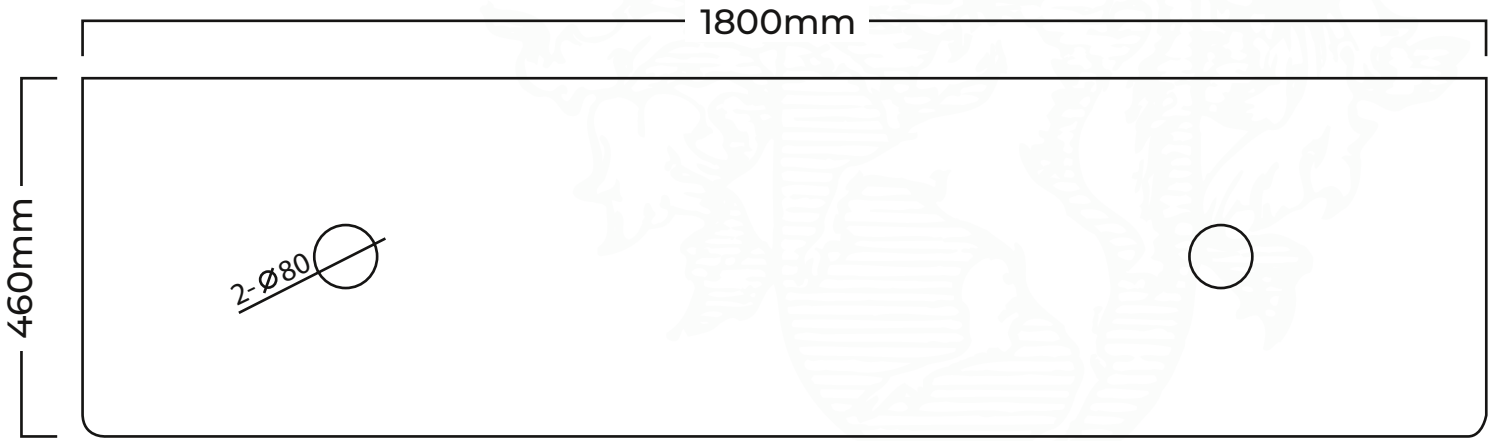

'unearth the uncommon'

Sizes shown in millimetres.